2010 25th International Symposium on Defect and Fault Tolerance in VLSI Systems

Online Multiple Fault Detection in Reversible Circuits

Navid Farazmand[1], Masoud Zamani[1], Mehdi B. Tahoori[1,2]
[1]Computer Engineering Department, Northeastern University, Boston, United States
{nfarazma, mzamani, mtahoori}@ece.neu.edu
[2]Faculty of Informatik (ITEC), Karlsruhe Institute of Technology,Karlsruhe, Germany
mehdi.tahoori@kit.edu

Abstract

Reversible logic is one of the promising domain for ultra low power consumption by eliminating power dissipation due to information loss. In addition, quantum computing systems inherently have property of reversibility as their mechanism of operations.

In this paper we propose a set of novel reversible logic blocks based on dual-rail coding to provide online multiple fault detection capabilities. We also provide a flow to map any reversible logic to these building block gates. Such implementation provides online detection of all single faults and most of multiple faults. Experimental results and comparison with previous work confirm the effectiveness of the proposed technique in terms of high fault coverage (100% of single faults and 88% of multiple faults in average) as well as low area overhead (up to 83% area reduction in average).

1 Introduction

By scaling down and increasing device density, power consumption and high failure rate are becoming serious challenges for digital circuits. Reversibility is a necessary condition to near-zero energy dissipation in a circuit [1]. Although, at current technology, energy losses due to irreversibility are negligible with respect to the overall power dissipation, but this may change for emerging non-CMOS technologies, such as quantum computing. Many modern computational problems (e.g. quantum computing, cryptography, and communications) are reversible in nature [1, 2]. Reversible logic is a computation method, in which information of the input data of the system can be computed reversibility from the information on the output data.

Considerable research has been devoted to synthesis of reversible logic. However, while a common problem of all emerging technologies is high failure rate, there is not enough study on online testing of reversible logics which is necessary for fault tolerant design of these circuits.

Proposed techniques for online testing of reversible circuits are either parity generating (e.g. [3, 4]) or parity-preserving methods (e.g. [5, 6, 7]). Major disadvantages of these techniques are huge area overhead, lack of multiple fault detection, and inefficiency on detecting fault on the inputs.

In our previous work, we introduced dual rail reversible gates to enable detection of all single faults in a reversible circuit [8]. However, reversible circuits mapped to these gates cannot detect multiple faults. In this paper, we propose a technique to detect multiple faults in reversible circuits by introducing a set of novel dual rail reversible gates. Using these gates for the implementation of the reversible circuits, all single and majority of multiple faults (both permanent and transient faults resulting in bit flip) on inputs and outputs of the gates are detected. Since, all other fault types which occur inside of the gates (such as missing-gate faults and repeated-gate fault [9, 10]) result in multiple bits-flip on outputs of the gate, our proposed method can detect most of them. The proposed approach also eliminates the need for intermediate checkers, i.e. fault detection is done only by observing the primary outputs of the circuit. Since these reversible logic blocks are universal, any logic circuit can be mapped to them for reversible implementation. Experimental

1550-5774/10 $26.00 © 2010 IEEE
DOI 10.1109/DFT.2010.57

IEEE computer society

results show the efficiency of the proposed gates both in multiple faults coverage and low area overhead.

The organization of the rest of the paper is as follows: Section 2 presents basic concepts of reversible logic as well as a review of the related work. Section 3 introduces the proposed dual rail reversible gates. Experimental results are discussed in Section 4. Finally, Section 5 concludes the paper.

2 Preliminaries

2.1 Reversible logic

Traditional digital circuits erase bit information every time they perform logic operations. These logic operations are therefore called irreversible. On the other hand, in the reversible logic data is bijectively transformed without losing any of the original information. Furthermore, reversible logic is a boolean function which provides a one to one mapping between inputs and outputs [2]. In other words, each input entry in truth table of a reversible module corresponds to one and only one distinct output entry. Therefore, the number of inputs of the function must be equal to the number of its outputs [2].

One to one mapping is the necessary and sufficient condition for a module to be reversible. However, in order to have the property of reversibility in a circuit, there are other constraints. Having fanout on a wire results in irreversibility of the circuit. In addition to this, reversible circuits do not contain any state holder, feedback, and other conventional sequential elements [11].

Reversible gates usually have more inputs/outputs compared to conventional CMOS counterparts due to the reversibility constraints. These extra lines, called *Garbage Lines*, do not carry any useful logical information in most cases. There are also some inputs fixed to a constant logical value in reversible gates which are called *Control Lines* [2].

2.2 Related Work

Reversibility leads to full controllability and observability in the circuit, which significantly simplifies testing compared to irreversible circuits [12]. It has been shown that for any reversible circuits, there is a complete single stuck-at fault test set. This test set also detects all multiple stuck-at faults in the circuit as well [12]. However, it has been shown that finding a minimum complete test set is NP-hard [13]. Various algorithms to generate complete test set for single and multiple-stuck-at fault models have been introduced (e.g. [14]).

Varity of parity generating techniques have been proposed in [3, 4, 15]. The general idea behind these techniques is generating a parity before (reference parity) and after (checking parity) computation. Each computational stage in these techniques consist of two cascaded blocks. The logical operation of the stage is implemented by the first block which generates founctional outputs as well as a parity bit of the functional operation. The second block also generates another parity for those outputs. Any fault resulting in incorrect parity can be detected by comparing these two parity bits. However, in addition to high area overhead of this method, it cannot detect faults on the inputs of the first block.

The technique proposed in [15] falls within the same category as [3, 16]. The targeted fault suites are the same in these three techniques and hence the coverage is the same. The advantage of [15] over [3] is that the implementation of different adder circuits is more efficient using the gates proposed in [15]. But, this technique still uses a large two-rail checker which its contribution to the overall area is predominant.

A parity preserving approach for design of reversible logic circuits has been presented in [5]. A class of reversible logic gates has been introduced in which the parity of the outputs matches that of the inputs. An error detection and correction technique using multiple parity prediction technique based on Low Density Parity Check (LDPC) code has been introduced in [6]. A 4×4

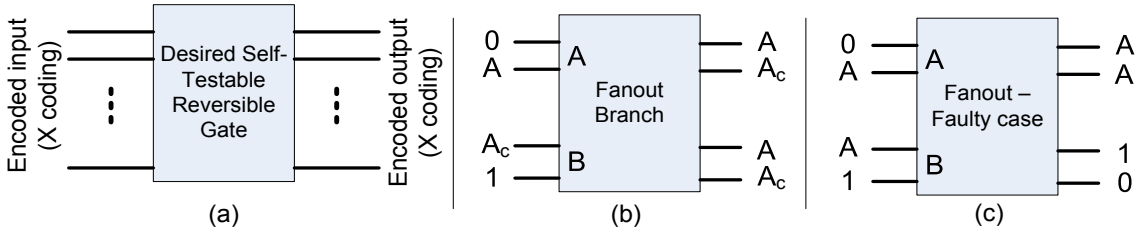

Figure 1. The schematic of (a) General structure of desirable self-testable reversible gate (b) fanout branch gate presented in [8] (c) prevent replication of non-dual rail value

reversible gate for implementing hamming coding as well as the detection circuits are proposed in [7]. Similarly, another set of gates are introduced in [17, 18] with parity preserving property. However, such techniques are ad-hoc and are not readily applicable to all reversible circuits, as they introduce complexities in the synthesis process of reversible circuits. In addition to this, if a fault occures on an input, it is not detectable.

3 Dual rail online fault detection

3.1 Self-testable reversible gate

Our proposed reversible gates aim to overcome the limitations of the previous work; i.e. providing full coverage for single faults, high coverage for multiple faults and eliminating the need for separate checker gates to be designed and used at the intermediate nodes of the circuit. Figure 1.a represents the general relationship between the inputs and the outputs of such desired gate. This self-testable gate works based on the assumption that inputs are represented by a specific code, say X. The gate should be designed in such a way that the fault-free outputs fall within the codewords of code X (the same coding as the inputs). Any fault (s) at the inputs or inside the gate can be detected, if it (they) results in a non-codeword value at outputs; i.e. the output value is not a valid codeword in code X. This way the fault effect is propagated to the output of the gate and fault is detected by checking the output codewords.

In addition to providing fault detection capability, the desired reversible gate should provide *branching* capability since interconnect branches are not permitted in reversible logic. Figure 1.b represents fanout branch proposed in [8]. Figure 1.c shows that the configuration for fanout branch which duplicates DR inputs. When the input is NDR (faulty), it produces a NDR output only on one of the outputs, to prevent the multiplication of faults in circuit.

3.2 Multiple fault-testable reversible gates

In our previous work [8], we have proposed 4×4 reversible gates with the ability of detecting single faults. Here, we extend these gates to detect multiple faults as well. In this work, dual rail coding scheme is used to represent inputs/outputs of the proposed reversible gates. In dual rail scheme, each logical data is represented by two complement signals, S and S_c; i.e. logical 1 and 0 are represented by 01 and 10 respectively. These complement values are called *Dual Rail (DR)* values. A fault changes only one of the signals (including multiple faults on various signals) results in a *Non-Dual Rail (NDR)* value (i.e. 00 or 11). The existence of such NDR values in the outputs thus is a sign of a fault in either interconnects or logic gates.

Table 1 represents the truth table for the proposed *Multiple Fault Testable reversible Gate (MFTG)*. This gate has 5 inputs and 5 outputs, which has been shown in Figure 2.a. The table has 32 entries which are presented in two separate side-by-side tables. This reversible gate uses dual rail coding at both data inputs (I_1 and I_2) and data outputs (F_1 and F_2). To preserve the

Table 1. The truth table of MFTG. White rows indicate cases in which data inputs are fault free, light gray rows are cases in which there is a single fault on data inputs, and dark gray rows indicate two faults on data inputs

	C	I_1	I_{1c}	I_2	I_{2c}	F_1	F_{1c}	F_2	F_{2c}	G
0	0	0	0	0	0	0	0	0	0	0
1	0	0	0	0	1	0	0	0	1	0
2	0	0	0	1	0	0	0	0	1	1
3	0	0	0	1	1	0	0	1	1	0
4	0	0	1	0	0	0	0	1	0	0
5	0	0	1	0	1	1	0	1	0	0
6	0	0	1	1	0	1	0	0	1	1
7	0	0	1	1	1	1	1	1	0	0
8	0	1	0	0	0	0	0	1	0	1
9	0	1	0	0	1	1	0	0	1	0
10	0	1	0	1	0	0	1	0	1	0
11	0	1	0	1	1	1	1	1	0	1
12	0	1	1	0	0	1	1	0	0	0
13	0	1	1	0	1	1	1	0	1	0
14	0	1	1	1	0	1	1	0	1	1
15	0	1	1	1	1	1	1	1	1	0
16	1	0	0	0	0	1	0	1	1	1
17	1	0	0	0	1	0	0	0	0	1
18	1	0	0	1	0	1	1	1	1	1
19	1	0	0	1	1	0	1	1	1	0
20	1	0	1	0	0	0	1	0	0	0
21	1	0	1	0	1	1	0	1	0	1
22	1	0	1	1	0	1	0	0	0	0
23	1	0	1	1	1	0	1	0	0	1
24	1	1	0	0	0	0	1	1	1	1
25	1	1	0	0	1	1	0	1	1	0
26	1	1	0	1	0	0	1	0	1	1
27	1	1	0	1	1	1	0	0	0	1
28	1	1	1	0	0	0	1	1	0	0
29	1	1	1	0	1	1	1	0	0	1
30	1	1	1	1	0	0	0	1	1	1
31	1	1	1	1	1	0	1	1	0	1

property of reversibility, an extra input (C) is added to the gate. This input is a control input which must be constant 0. Lastly, the additional output G is a garbage output.

The entries in Table 1 are divided into three different categories with different colors. The entries in white belong to the fault-free operation of the reversible gate on output F_1 (entries 5,6,9,10,21,22,25, and 26). As can be seen in all of these cases, I_1 and I_2 are DR (fault-free) signals. The main output of the gate is F_1. The gate shown in Table 1 implements NAND function on output F_1. All basic logic functions, AND, OR, NAND, and NOR could be mapped on this main output. To reduce area overhead the output F_2 is used in an efficient way to implement NOR (OR) function. However, it can be modified to operate as XNOR (XOR), as well. There are different scenarios faults can affect MFTG.

- Entries in light gray in the Table 1 correspond to cases in which there is only one fault on data inputs, i.e. either I_1 or I_2. In all of these cases the main output of the gate, F_1, is NDR (faulty) making it possible to propagate the fault effect all the way to the primary outputs of the circuit.
- The dark gray rows in this table show the cases in which both data inputs are NDR, i.e. multiple faults exist at the inputs. If C is 0, in these cases both outputs F_1 and F_2 will be NDR and the fault is propagated through succeeding gates all the way to the primary outputs.

Even if the fault effects F_1 and F_2 are propagated to the same gate, g, they cause multiple NDR values at the inputs of g, which result in NDR values on at least one output of g. Therefore, all NDR errors will be propagated level by level until they reach primary outputs and, hence, detected. Ideally, when there are faults on data inputs of the MFTG it should produce NDR value on both of the outputs. However, due to reversibility it is impossible to have such assignment in truth table of the gate (one-to-one mapping constraint). Therefore, there are some cases (e.g. when C is 1) in which NDR inputs result in *Erroneous Dual Rail (EDR)* outputs and faults are not detectable. These cases cause misdetection.

The behavior of the proposed gate in the presence of different faults is summarized in the table presented in Figure 2.(b). In this table the behaviors of F_1 and F_2 with respect to different fault scenarios are shown.

3.3 Analysis of the multiple fault coverage of MFTG

Multiple faults coverage of the proposed gate not only depends on the number of faults in the gate but also the location of the faults. Table 2 represents detection coverage for different number of faults in the proposed reversible gate. First column of this table represents number of faults. For example, the first row corresponds to the existence of a single fault. The Second column in

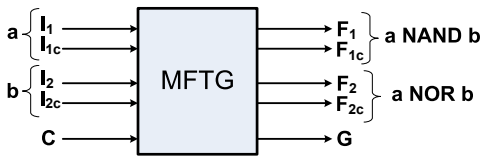

(a)

C	I_1	I_2	Behavior of F_1	Behavior of F_2
Fault-Free	DR	DR	NAND	NOR
Fault-Free	DR	NDR	NDR	EDR
	NDR	DR	NDR	EDR
	NDR	NDR	NDR	NDR
Faulty	DR	DR	NAND	NOR / NDR
	DR	NDR	EDR	NDR
	NDR	DR	NDR	NDR
	NDR	NDR	EDR	EDR / NDR

(b)

Figure 2. MFTG and its behavior (a) Block diagram of MFTG, (b) Summery of the MFTG behavior: fault-free dual rail outputs are shown by DR. NDR stands for non-dual rail which is detectable. Undetectable situations are shown by EDR (erroneous dual rail). NOR and NAND show the logic function of the outputs

each row represents the number of different multiple fault cases for the given number of faults in the first column and the third column is the number of fault cases which are detected only by the main output of the gate, F_1. Fault cases are obtained by distributing the faults over different fault sites, i.e. gate inputs. The forth column is related to all faults which can be detected by output F_2. The fifth columns in the table show that if both outputs are used, the fault coverage increases considerably. Whether both outputs of a reversible gate can be utilized or not, depends on the logic function as well as synthesis flow of the circuit.

To take advantage of an increased fault coverage offered by F2 , we can use some extra components to collect unused outputs on F_2 . These outputs are collected as a single additional primary output by cascaded MFTGs. This structure is shown in Figure 3.

The ability of MFTG in detecting multiple faults is summarized in the following lemmas:

Lemma1: All single faults are either masked or detected.

Proof: According to Table 2 any single fault on data inputs (I_1 and I_2) causes a non-dual rail value on F_1. Such NDR value feeds data input on a subsequent gate as a single NDR fault at next stage and propagates all the way to the primary outputs. Moreover, any single fault on input C is masked on F_1 and masked/detected on F_2 (since data inputs are fault free).

Lemma2: All multiple NDR faults on data inputs are detected (C is fault free).

Proof: Multiple NDR faults on data inputs of any gate result in multiple NDR faults on both outputs F_1 and F_2 (Table 2). This results in NDR fault (s) at next stage. Based on induction on the number of stages from fault site to primary output, either of these NDR values or both of them are propagated to a primary output and fault is detected.

Lemma3: If C is faulty, all single NDR faults on data inputs are detected on F_1 and F_2.

Proof: The proof is straightforward using the truth table in Table 2.

Table 2. Multiple fault coverage of the proposed reversible gate (MFTG)

# faults	# fault cases	# F_1 detect	# F_2 detect	# either F_1 or F_2 detect
1	5	5	1	5
2	10	6	8	8
3	10	4	2	6
4	5	2	4	4
5	1	0	0	0
	Overall F. C.	55%	48%	74%
	all NDR F. C.	100%	42%	100%

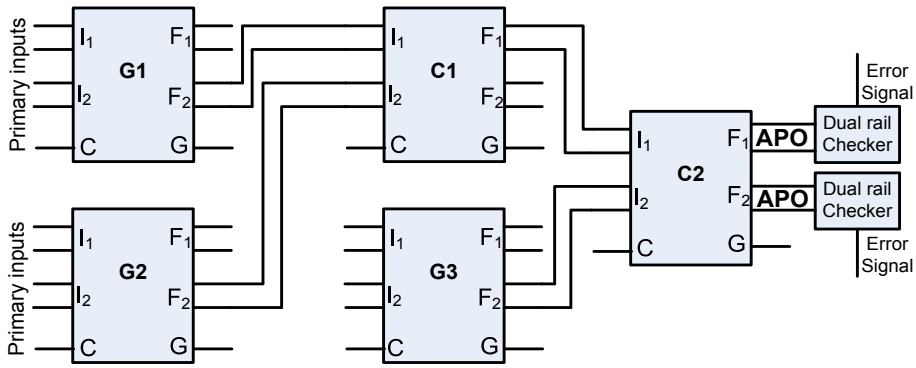

Figure 3. Increasing fault coverage by checking garbage outputs

3.4 Detecting other fault models

Most of proposed online testing methods for reversible circuits assume stuck-at fault model [3, 4, 5, 6, 7]. However, some literatures have questioned the appropriateness of stuck-at fault model for physical errors of reversible circuits, particularly in the scope of quantum computing [9, 10]. Therefore, new fault models have been proposed for reversible logic circuits. These fault models are based on the concepts of missing and repeating gate operations at the logical level [9, 10]. For example, *Single Missing-Gate Fault (SMGF)* model assumes a gate is replaced by wire in the circuit. *Repeated-Gate Fault (RGF)* model also assumes a gate is duplicated in the circuit.

Behavior of these faults can be translated as bit-flip (s) on one or more signal lines at the inputs/outputs of logic blocks. As mentioned earlier, previous techniques for online testing of reversible circuits can not detect any fault which occurs inside of the blocks. However, in contrast to these techniques, our multiple fault detection method can also detect most of the faults occurring inside the blocks. Therefore, as long as faults based on these reversible fault models result in bit-flips as NDR outputs, the proposed MFTG can detect them.

3.5 Reversible logic implementation using MFTGs

Figure 4.a shows an irreversible circuit which has been converted to a reversible circuit with proposed MFTGs (Figure 4.b). As can be seen, there is one non-functional reversible gate intended to implement fanout branch in the circuit by using fanout branch gate, presented in Figure 1.b [8]. Any transient or permanent fault during system operation generates an NDR value which is propagated all the way to the primary outputs. By asserting dual rail property of the primary outputs faults are detected whether they are in interconnects or in the logic gates. Dual rail checkers shown at the primary outputs of the circuit in Figure 4.b perform the assertion. These checkers consist of reversible XNOR gates which generate 1 (raise error signal) in case of an NDR value at their input (primary outputs of the circuit).

Consider the node values in Figure 4.b. There are two values for each node in the form of [fault-free value]/[faulty value]. Assume that both inputs A and B of the circuit are faulty; A is 11 and B is 00. Arrows with the thick lines show the paths through which fault effects are propagated to the primary outputs. Note that reversible gate $G1$ implements both NAND function (gate 1 in schematic) and OR function (gate 2 in schematic) at the same time. As mentioned in Section 3.3, this configuration is useful for reducing the area as well as increasing fault detection coverage. Two fanout branch gates and one logic gate are eliminated by this configuration. Since both inputs of $G1$ are faulty, both of its outputs become faulty. Output F_2 feeds two gates. So, it goes through a fanout branch gate which duplicates this signal. According to Figure 1. c, NDR input at the branch gate is propagated only on one of the outputs. Therefore, here the faulty value is only propagated to the first output of the branch gate. The two faulty values from $G1$ and branch gate appear at

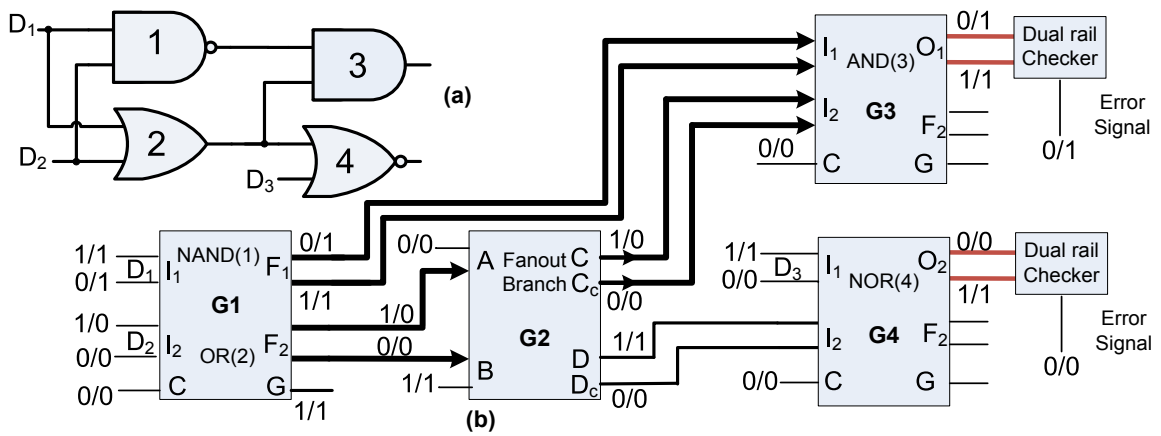

Figure 4. An example of online fault testable circuit implementation using self-testable reversible gates (a) Irreversible schematic of the circuit, (b) Reversible realization of the circuit with MFTGs

the inputs of $G3$. As a result the output F_1 of $G3$ becomes NDR and the checker at the primary output O_1 activates error signal. The other checker at output O_2 do not signal any fault since the fault is not propagated to G4.

The structure shown in the Figure 3 takes advantage of the coverage offered by F_1 output of each MFTG except those gates which implement two logic functions in one MFTG, e.g. NAND and OR functions in G1. In order to increase the fault coverage and detect those faults which are only detected on F_2 output of MFTG (Table 2 in the Section 3.3), a structure illustrated in Figure 3 can be used. G_i gates, $i = 1..3$, implement logic function of the circuit. However, C_i gates, $i = 1..2$, are used only for collecting garbage outputs to an *Additional Primary Output* (APO) and propagate NDR values on any of those garbage line to APO to increase coverage.

4 Experimental results

At present, physically reversible technologies are found only in the quantum domain; therefore appropriate cost estimation methodology for a circuit synthesized to this logic is based on quantum limitations. Number of lines in a circuit is a point of interest due to its importance in reliability and resources limitation in quantum circuits. In quantum computation, number of circuit lines corresponds to the number of qubits. Therefore, they determine the amount of required resources for a circuit. In addition to this, the number of lines may affect reliability of circuit. Therefore, the number of circuit lines is an important factor in cost evaluation of a circuit synthesized to reversible gates [19].

Reversible circuits are proposed to be implemented on a technology in which dominant power consumption source is due to information loss. In such a technology these circuits consume near-zero energy. Therefore, it is meaningless to report on power consumption of reversible circuits mapped into CMOS technology in which the dominant source of power is not due to information loss.

Here we present the comparison for area and number of garbage outputs between our proposed reversible gates and the technique presented in [3, 16]. The circuit structure used in synthesis of these results is based on the structure in Figure 4.b.

The cost of MFTG is 5. The cost of single fault testable gate [8] is 4. The area of proposed gates in [3] are 4 units, also two-pair two-rail checkers in [3] has area of 18 units.

A subset of combinational benchmark circuits has been chosen for our experiments from the MCNC benchmark suite. These circuits are mapped on basic logic gates, i.e. AND, OR, NAND, and NOR. Then the area is calculated for different schemes based on the area of basic logic each scheme provides (which could be different from one scheme to another). SIS synthesis tool [20] has been used for this mapping step.

Table 3. Comparison of the area and number of garbage outputs (garb.) of the techniques based on the proposed reversible gates in this paper (MFTG) and proposed gates in [8] with previous techniques based in [3, 16] on a subset of MCNC benchmark circuits. Area is divided into Logic Cost (L.C.) and Branch Cost (B.C.) due to the fanout branch gates.

		b1	clip	con1	majority	misex1	rd53	t	average	total cost
[16]	L. C.	169	8,827	351	169	936	1,495	377	1,761	2,107
	B. C.	52	1,508	104	26	247	455	26	346	
	garb.	52	2,716	108	52	288	460	116	542	
[3]	L. C.	338	17,654	702	338	1,872	2,990	754	3,521	4,222
	B. C.	104	3,016	208	117	494	910	52	701	
	garb.	117	6,111	243	26	648	1,035	261	1,206	
[8]	L. C.	60	2,500	88	36	268	424	96	496	681
	B. C.	24	800	48	20	148	220	40	185	
	garb.	30	1,250	44	18	134	212	48	248	
MFTG	L. C.	65	2,870	105	40	330	495	120	575	687
	B. C.	16	596	44	16	144	192	40	112	
	garb.	48	2,194	82	30	262	382	96	442	
	MF Coverage	89.0%	97.9%	71.3%	74.2%	98.8%	88.1%	100%	88.5%	
	merged	2	51	1	1	1	7	0		

The experimental result for benchmark circuits is summarized in Table 3. The first two rows represent the area for logic elements and branches. Total area is shown in the last column of the table. As can be seen, our proposed technique results in $3X$ and $6.1X$ area reduction (in average) compared to previous work [16] and [3] respectively. Although the proposed MFTG provides high multiple fault coverage, the results show that it does not impose considerable overhead in terms of area to the single fault testable presented in [8].

The third row for each technique represents the number of garbage outputs. Reduction in the number of garbage outputs for the proposed technique is about $1.2X$ and $2.7X$ for [16] and [3] respectively. This is in addition to multiple fault coverage in our technique and 100% coverage for single faults. Note that, multiple fault coverage is achieved at the cost of more garbage outputs compared to the technique in [8] (about $1.8X$ increase).

Table 3 also present multiple faults coverage of a set of benchmarks implemented on proposed gates. To extract these results, we have implemented a fault simulator. In this simulator, a circuit is simulated by a set of test vectors. Then multiple faults are randomly injected to the circuit. The number of injected faults was a random number chosen between 1 and the number of fault sites in the circuit. Then these faults are randomly injected in the circuit. For each fault injection experiment, $3,000$ test vectors are simulated. In order to increase accuracy of the fault simulation coverage, we have repeated the simulation for $5,000$ different fault cases. Coverage is reported based on number of faults which results NDR value at primary outputs (outputs which are not garbage) over the total number of faults which results in error at these outputs.

5 Conclusion

Reversible logic as a promising alternative for classical computation has extensive applications in emerging nanotechnologies, such as quantum computing and ultra low power computation. However, online testing of reversible logic with respect to multiple faults has not been addressed properly.

In this paper we proposed a set of novel dual-rail reversible gates for efficient online multiple fault detection. The major advantage of the proposed gates over previous work is that these gates can detect all single faults as well as majority of the multiple faults (88% of multiple faults in average). As shown by the experimental results, eliminating the need for intermediate checkers in the circuit and using a checker only at primary outputs reduces the area (up to $6.1X$) and the number of garbage outputs (up to $2.7X$).

Our future work will consist of introducing appropriate implementation using conventional reversible logic gates. Such implementation based on gate-level reversible logic can help improving the detectibility of missing and repeating gate fault models.

References

[1] J. Donald and K. Niraj. Reversible logic synthesis with fredkin and peres gates. *ACM Journal on Emerging Technologies in Computing Systems*, 4(1):1–19, 2008.

[2] A. Barenco, C. H. Bennett, R. Cleve, D. P. DiVincenzo, N. Margolus, P. Shor, T. Sleator, J. Smolin, and H. Weinfurter. Elementary gates for quantum computation. *Journal on Physical Review A*, 52:3457, 1995.

[3] D.P. Vasudevan, P.K. Lala, D. Jia, and J.P. Parkerson. Reversible-logic design with online testability. *IEEE Transactions on Instrumentation and Measurement*, 55(2):406–414, April 2006.

[4] S.N. Mahammad and K. Veezhinathan. Constructing online testable circuits using reversible logic. *IEEE Transactions on Instrumentation and Measurement*, 59(1):101–109, Jan. 2010.

[5] B. Parhami. Fault-tolerant reversible circuits. In *Asilomar Conference on Signals, Systems and Computers*, pages 1726–1729, 29 2006-Nov. 1 2006.

[6] J. Mathew, J. Singh, A.A. Taleb, and D.K. Pradhan. Fault tolerant reversible finite field arithmetic circuits. In *IEEE International On-Line Testing Symposium*, pages 188–189, July 2008.

[7] R.K. James, T.K. Shahana, K.P. Jacob, and S. Sasi. Fault tolerant error coding and detection using reversible gates. In *IEEE Region Ten Conference*, pages 1–4, 30 2007-Nov. 2 2007.

[8] N. Farazmand, M. Zamani, and M. B. Tahoori. Online fault testing of reversible logic using dual rail coding. In *IEEE International On-Line Testing Symposium*, May 2010.

[9] I. Polian, T. Fiehn, B. Becker, and J.P. Hayes. A family of logical fault models for reversible circuits. In *IEEE Asian Test Symposium*, pages 422–427, Dec. 2005.

[10] J.P. Hayes, I. Polian, and B. Becker. Testing for missing-gate faults in reversible circuits. In *IEEE Asian Test Symposium*, pages 100–105, Nov. 2004.

[11] M. Chuang and C. Wang. Synthesis of reversible sequential elements. In *IEEE Asia and South Pacific Design Automation Conference*, pages 420 –425, 23-26 2007.

[12] K.N. Patel, J.P. Hayes, and I.L. Markov. Fault testing for reversible circuits. *IEEE Transactions on Computer-Aided Design of Integrated Circuits and Systems*, 23(8):1220–1230, Aug. 2004.

[13] S. Tayu, S. Ito, and S. Ueno. On the fault testing for reversible circuits. *Lecture Notes in Computer Science*, 4835:812–821, 2007.

[14] M. Ibrahim, A.R. Chowdhury, and H. Babu. On the minimization of complete test set of reversible k-cnot circuits for stuck-at fault model. In *International Conference on Computer and Information Technology*, pages 7–12, Dec. 2008.

[15] H. Thapliyal and A.P. Vinod. Designing efficient online testable reversible adders with new reversible gate. In *IEEE International Symposium on Circuits and Systems*, pages 1085–1088, May 2007.

[16] M. Hasan, I. Hasan, A.K.M. Tauhidul, and A. R. Chowdhury. Design and analysis of online testability of reversible sequential circuits. In *International Conference on Computers and Information Technology*, pages 180–185, Dec. 2009.

[17] S. Islam, M.M. Rahman, Z. Begum, Z. Hafiz, and A. A. Mahmud. Synthesis of fault tolerant reversible logic circuits. In *International Conference on Testing and Diagnosis*, pages 1–4, April 2009.

[18] M.S. Islam, M.M. Rahman, Z. Begum, and M.Z. Hafiz. Fault tolerant reversible logic synthesis: Carry look-ahead and carry-skip adders. In *International Conference on Advances in Computational Tools for Engineering Applications*, pages 396–401, July 2009.

[19] R. Wille, M. Soeken, and R. Drechsler. Reducing the number of lines in reversible circuits. In *IEEE Design Automation Conference*, pages 647–652, 2010.

[20] Sis synthesis tool documentation: http://embedded.eecs.berkeley.edu /pubs/downloads/sis/index.htm. 1994.